neverdark

Neverdark FIRETEC

Smart fireplace

HETVOOR
PREMIUM FIRES

TECHNICAL DOCUMENTATION

Dovozce a prodejce
HETVOOR DISTRIBUTION, Okružní 781, Nehvizdy 250 81, www.hetvoor.cz

CONTENT

04 CONFIGURATION 04 Standard configuration 05 Optional Extra **06 THERMOBOXES** **07 FIREPLACE INTERFACES** **08 DIMENSIONS**	**FIREPLACE**
09 NICHE PREPARATION 09 Niche dimensions 11 Niche requirements **12 INSTALLATION**	**INSTALLATION**
13 FEATURES 13 Technical information 14 Warnings	**TECHNICAL INFORMATION**

ATTENTION! This document, along with the User Manual, is a part of the device and is being delivered along with the fireplace (hereinafter collectively referred to as «Instructions»).
If one or both of these documents weren't delivered with your fireplace, please contact the manufacturer prior to the installation and/or use of the fireplace.

- Make sure to read this Technical Documentation (hereinafter «Documentation») before using the fireplace!
- Keep this Documentation in a safe place for the lifetime of the fireplace!
- This appliance by design, method of operation, consumer properties and technical safety fully complies with the requirements of the European Standard EN 16647:2015

ATTENTION! Please follow local laws when using the appliance.

SYMBOLS

FIRE AND BURN HAZARD SIGN

A WARNING SIGN indicates a potential for property damage, personal injury, or death

AN ATTENTION SIGN indicates important information

CONFIGURATION

Standard configuration

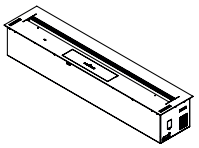	Smart fireplace (Standard top panel Black glossy) 1 pc
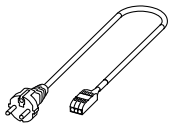	Power cable: Euro Plug — WAGO (length 2,7 m) 1 set
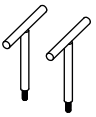	Mounting handles 2 pcs

	Fuel hose 1 pc
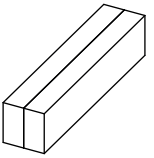	Packaging 1 pc
	Documentation 1 set

Optional extra

You can add any option listed below:

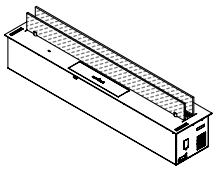	**G**lass **B**order (one or two) code **GB** (1, 2)
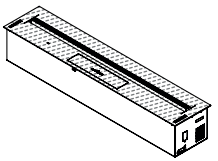	**C**ustom **T**op (**M**atte (black), **R**AL **G**lossy, **R**AL **M**atte, **I**nox) code **CT** (**M**, **RG**, **RM**, **I**)

	Remote **C**ontrol code **RC**
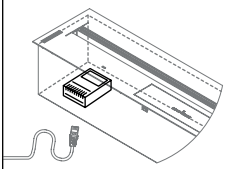	**S**mart **H**ome connection module code **SH**
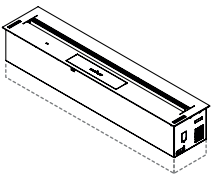	**E**nlarged **F**uel **T**ank code **EFT**

ARS (the external control and refuelling module) is available in three configurations:

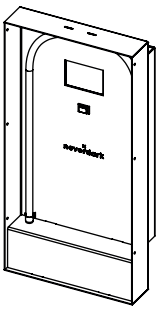	**S**tandard **ARS** code **S-ARS**

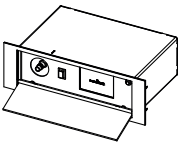	**M**ini **ARS (down)** code **M-ARS(down)**
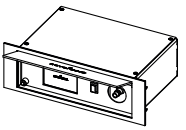	**M**ini **ARS (up)** code **M-ARS(up)**

THERMOBOXES

You can also choose the Neverdark Thermobox for your fireplace. The Thermobox can withstand temperatures up to 200°C, allowing you to choose any material for lining the niche.

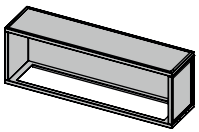	**S**ingle-**S**ided code **TSS**	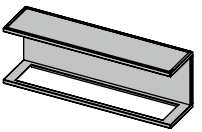	**T**hree-**S**ided code **TTS**
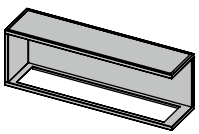	**R**ight **Co**rner code **TRC**	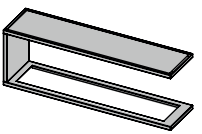	**R**oom **D**ivider code **TRD**
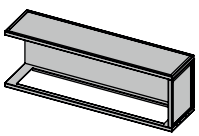	**L**eft **C**orner code **TLC**	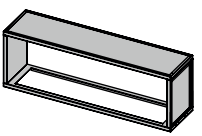	**S**ee-**T**hrough code **TST**

FIREPLACE INTERFACES

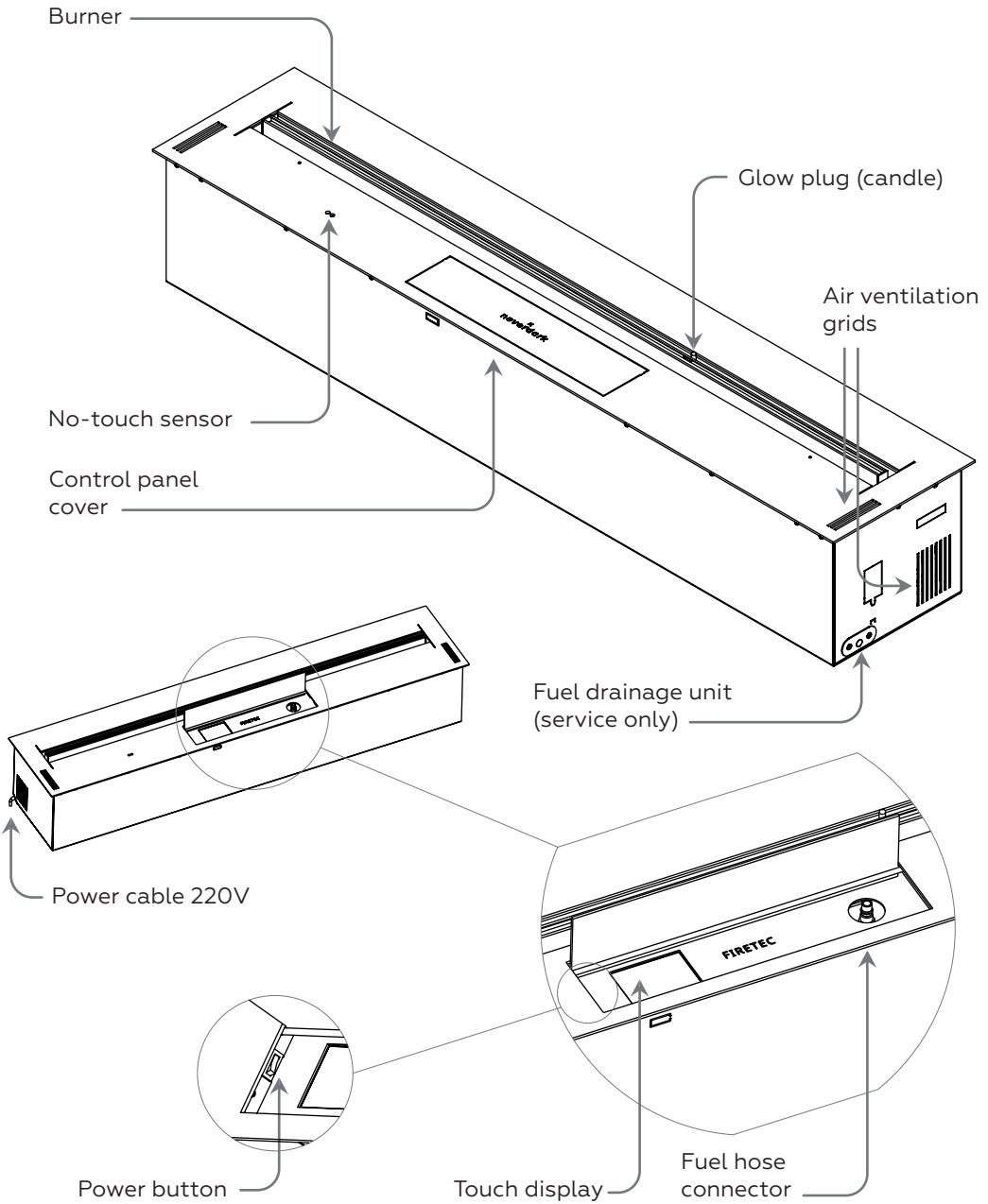

DIMENSIONS

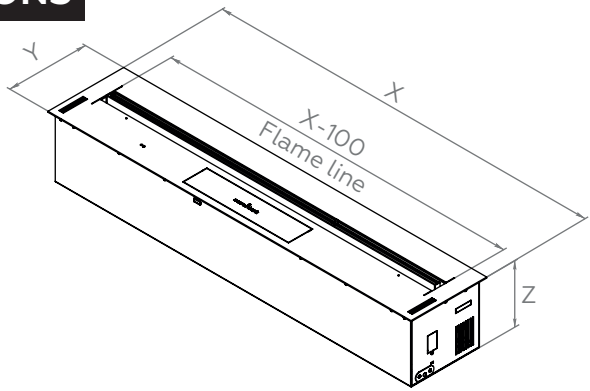

Standard range

		X	Y	Z	
Model	**Code**	**Length, mm**	**Depth, mm**	**Height, mm**	**Weight, kg**
Firetec 700	F7	700	250	205	21
	F7.EFT			255	25
Firetec 800	F8	800		205	24
	F8.EFT			255	28
Firetec 1000	F10	1000		205	31
	F10.EFT			255	34
Firetec 1200	F12	1200		205	35
	F12.EFT			255	40
Firetec 1500	F15	1500		205	44
	F15.EFT			255	48
Firetec 1700	F17	1700		205	49
	F17.EFT			255	57
Firetec 2000	F20	2000		205	58
	F20.EFT			255	65
Firetec 2500	F25	2500		205	72
	F25.EFT			255	82

NICHE PREPARATION

Niche dimensions for the fireplace with standard fuel tank

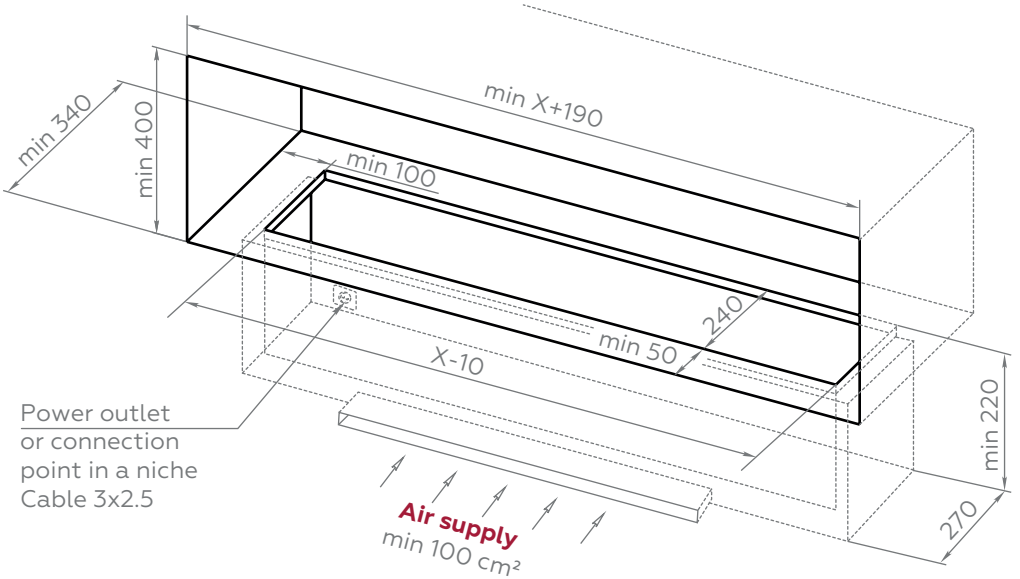

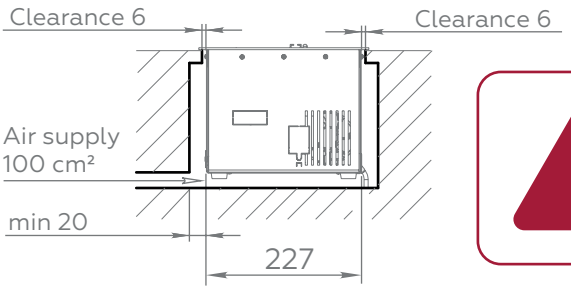

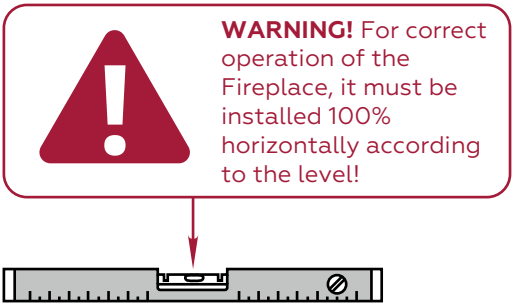

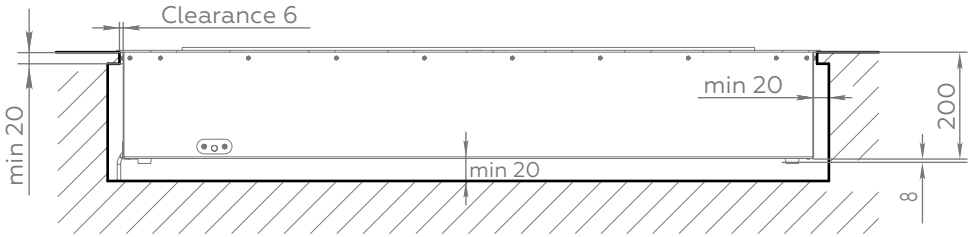

Niche dimensions for the fireplace with enlarged fuel tank

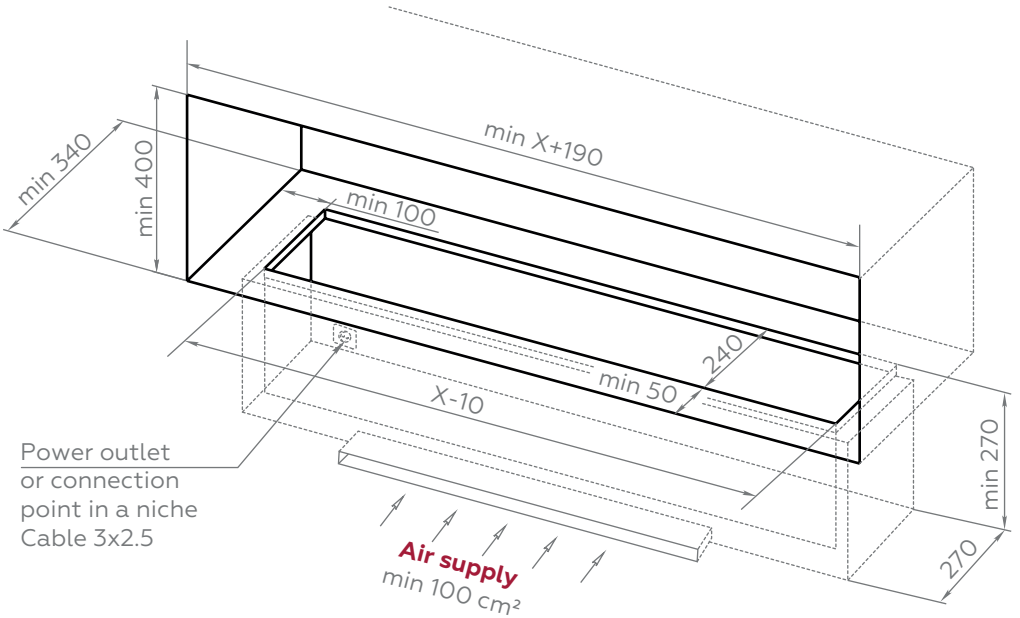

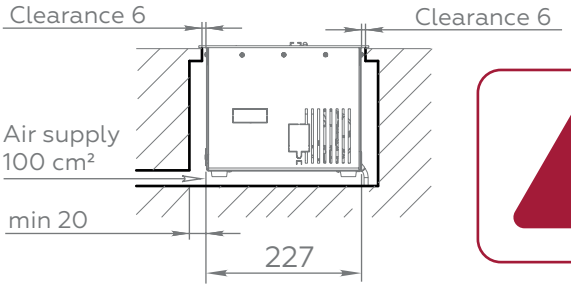

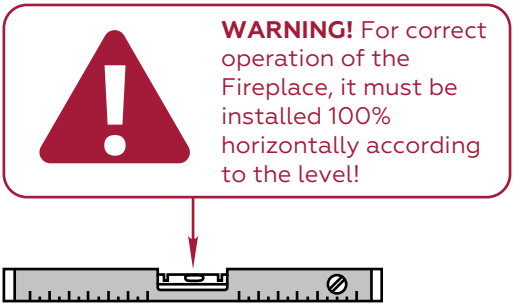

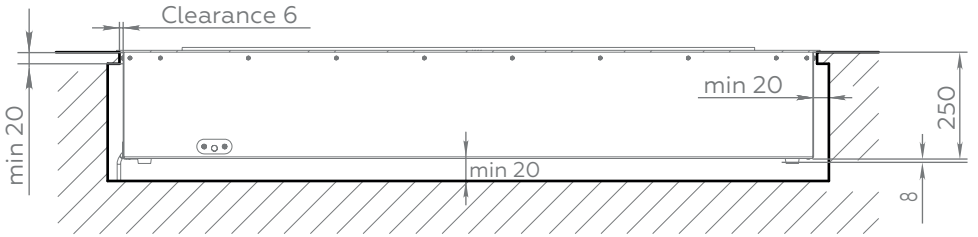

Niche requirements

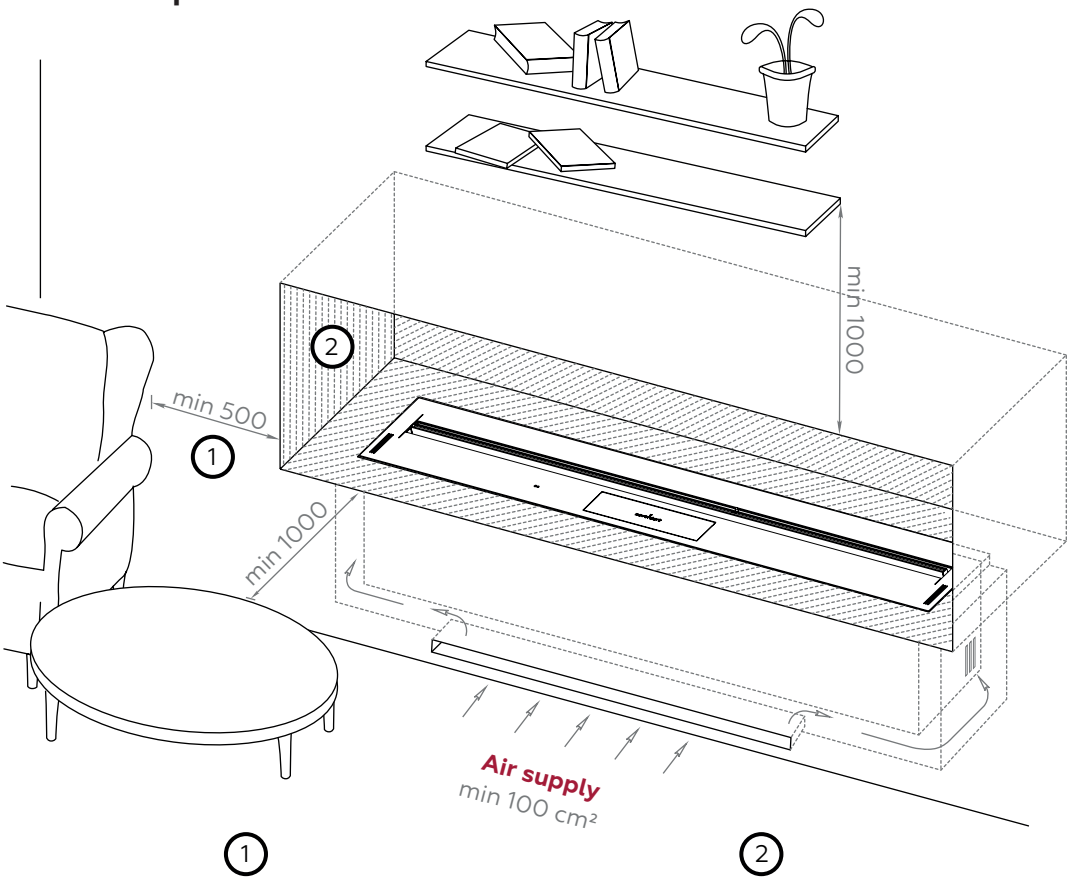

WARNING!
Min 1000 mm to flammable objects from any exposed side of the niche.

Min 500 mm to flammable objects from any closed side of the niche.

WARNING!
Heat-resistant material which withstands 150°C at least.

Alternatively, a non heat-resistant material + Neverdark Thermobox

WARNING! For safe and correct operation of the fireplace it is mandatory to provide an air supply opening (100 cm² at least) in the lower part of the niche.

INSTALLATION

WARNING! 220V cable connection must be carried out by a qualified electrician.

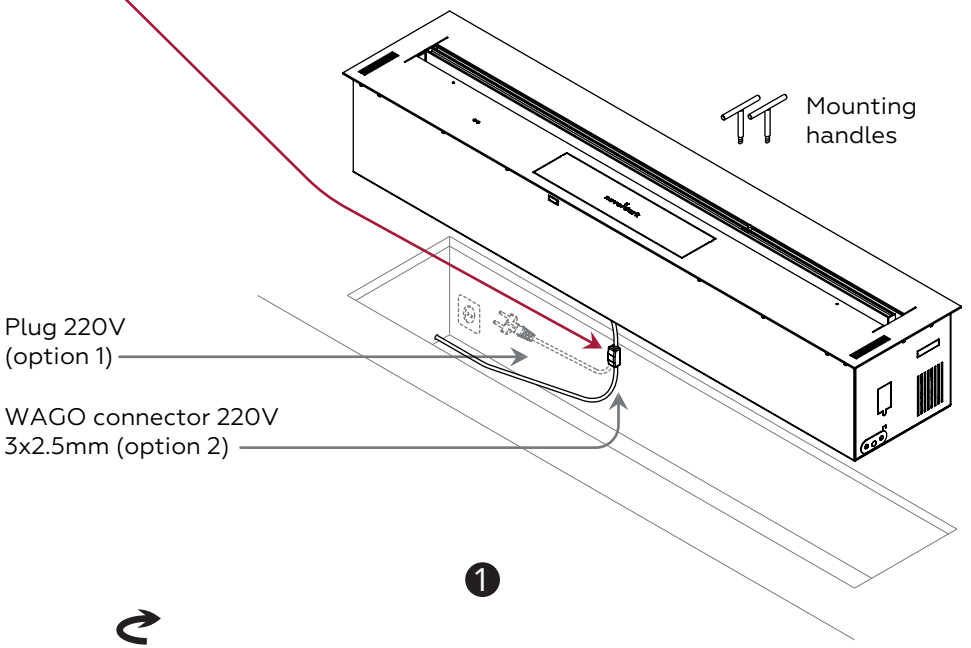

1

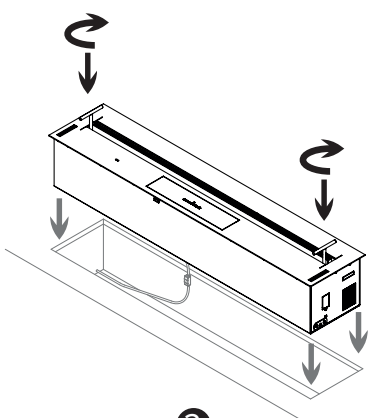

2

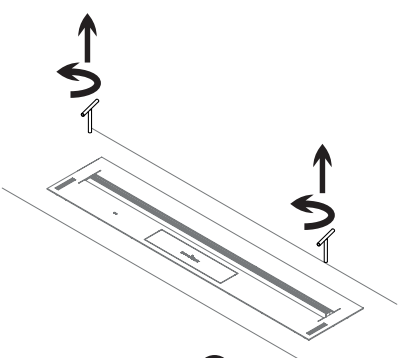

3

FEATURES

Technical information

Parameters		Fireplace model							
		Firetec 700	Firetec 800	Firetec 1000	Firetec 1200	Firetec 1500	Firetec 1700	Firetec 2000	Firetec 2500
Tank volume, l	Standard tank	3,3	3,9	5,2	6,4	7,9	9,3	10,7	13,5
	Enlarged Fuel Tank (EFT)	4,6	5,4	7,2	8,9	11,0	12,8	14,9	18,8
System volume, l	Standard tank	3,7	4,4	5,8	7,2	8,7	10,6	12,4	15,6
	Enlarged Fuel Tank (EFT)	5,1	6,1	8,1	10,0	12,1	14,7	17,2	21,7
Burning time, h (min | max)	Standard tank	4,1 | 9,4	3,9 | 9,8	3,7 | 8,7	4,0 | 9,7	4,0 | 8,8	4,0 | 8,5	4,3 | 8,9	3,9 | 7,1
	Enlarged Fuel Tank (EFT)	5,8 | 13,1	5,4 | 13,5	5,1 | 12,0	5,6 | 13,5	5,5 | 12,2	5,6 | 10,3	6,0 | 12,4	4,2 | 9,9
Consumption, l/h (min | max)		0,4 | 0,8	0,4 | 1,0	0,6 | 1,4	0,7 | 1,6	0,9 | 2,0	1,1 | 2,3	1,2 | 2,5	1,9 | 4,5
Average consumption, l/h (min | max)		0,6	0,7	1,0	1,1	1,5	1,8	1,9	3,2
Room size, m^2 (with I without ventilation system)		22 | 54	27 | 68	38 | 95	43 | 109	54 | 136	61 | 156	68 | 170	95 | 306
Max power consumption, kW		0,55	0,55	0,9	0,9	1,0	1,0	1,4	1,8
Heat power, kW (min | max)		2,3 | 5,2	2,6 | 6,5	3,9 | 9,1	4,3 | 10,4	5,9 | 13,0	7,2 | 15,0	7,8 | 16,3	12,4 | 29,3
Air consumption, m^3/h (min | max)		0,6 | 1,5	0,7 | 1,9	1,1 | 2,6	1,2 | 3,0	1,7 | 3,7	2,0 | 4,3	2,2 | 4,6	3,5 | 8,3
CO_2 release, m^3/h (min | max)		0,3 | 0,6	0,3 | 0,8	0,5 | 1,1	0,5 | 1,3	0,7 | 1,6	0,9 | 1,8	1,0 | 2,0	1,5 | 3,6

* Kindly note that some parameters may slightly vary (within 10%), due to different manufacturing date, climate/surrounding effects, fuel, etc.

Read USER MANUAL

Read SAFETY INSTRUCTION

Warnings

The manufacturer does not recommend placing objects that are sensitive to high temperatures above or next to the fireplace as this may significantly shorten their service lifetime.

In case the Technical Documentation and User Manual were not followed, the manufacturer would not be responsible for any damage to objects above or next to the fireplace.

ATTENTION! Kindly follow next rules while using the Neverdark fireplace:

- Keep away from children;
- Ensure that the wall/table/floor on which you place the appliance can withstand its weight;
- Install in a place protected from draughts only;
- Do not cover top or side ventilation grids;
- Do not place flammable objects on the appliance;
- Keep a carbon dioxide fire extinguisher within sight;
- The use of a separate electricity line with a fuse and/or circuit breaker is mandatory;
- For comfortable use of the fireplace it is necessary to ensure the supply of a fresh air into the room, as well as removal of a cobustion products. It can be a ventilation extractor, recuperator or an opened window;
- Keep this Documentation in a safe place for the lifetime of the fireplace!

NEVERDARK LLC